Next Dimension Classic Series

Sliding Patio Door (Transom)

Parts Identification

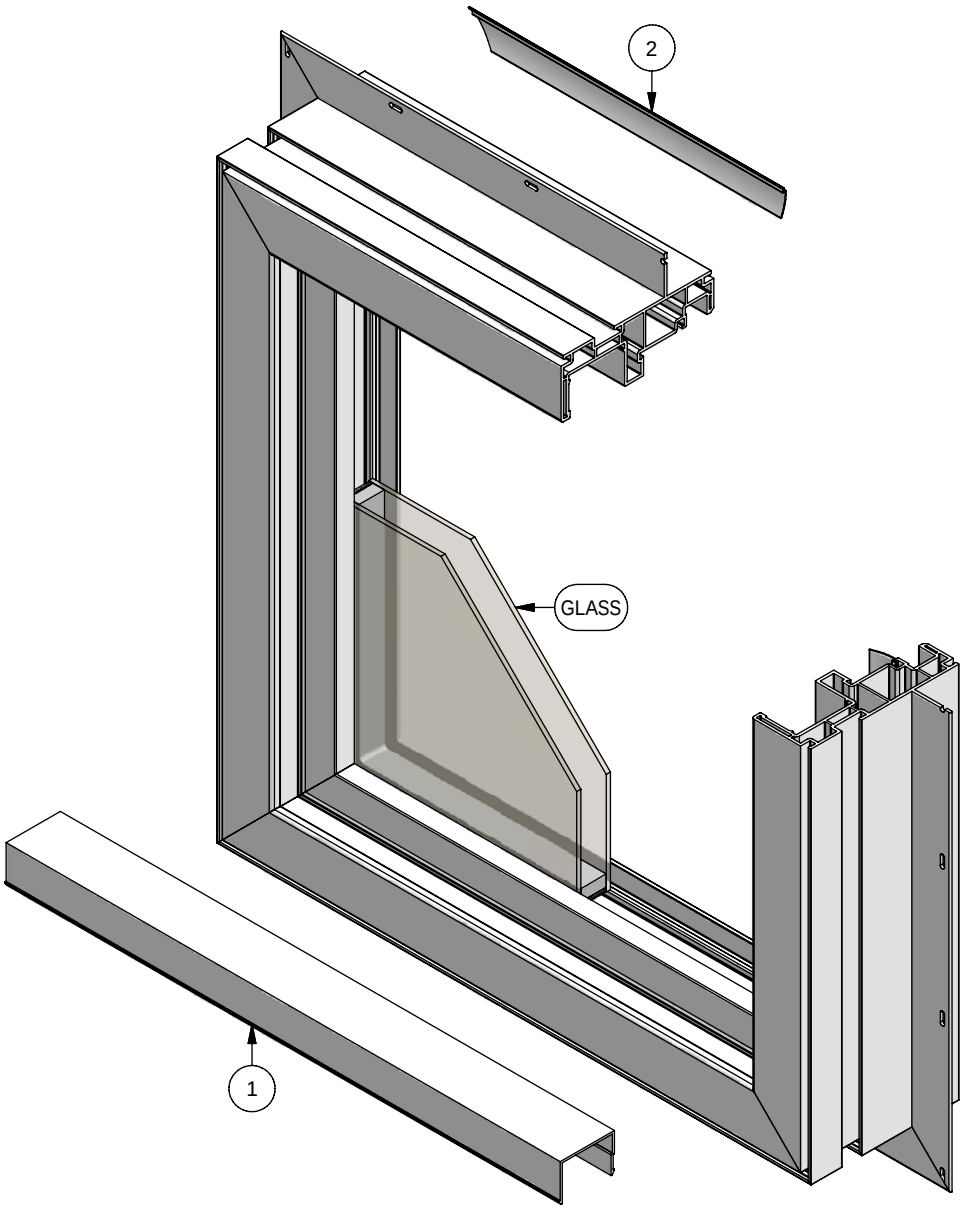

Next Dimension Classic Series
Sliding Patio Door (Transom)
Parts Identification

Image	Item #	Description	Color / Finish	Spec	Part #
	1	Frame Filler	White Clay	13'-0"	2370283 2371284
	2	Square Glazing Bead	White Clay Bronze Black Tan Ivory Cinnamon Green White	13'-0"	700013 701013 700013-BZ 700013-BK 700013-T 700013-I 700013-C 700013-G 700013-W
		Glazing Tape 1/16" x 1/2"	White	216 ft	394100