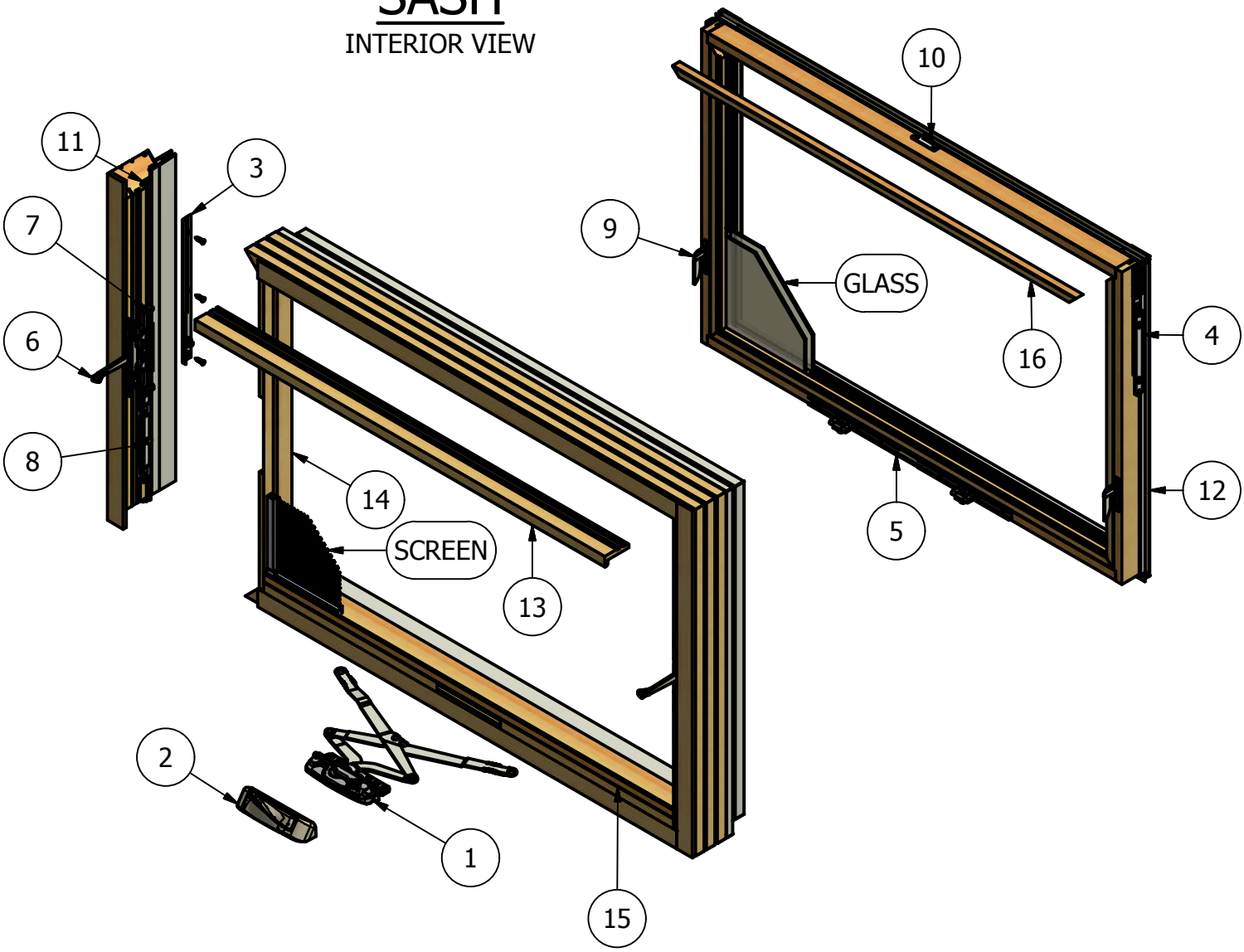
Revive Series
Hybrid Casement (Awning)
Parts Identification

SASH
INTERIOR VIEW



FRAME
INTERIOR VIEW

Revive Series
Hybrid Casement (Awning)
Parts Identification

Image	Item #	Description	Color / Finish / Size	Spec	Part #
	1	Operator	Standard Seacoast		542029 542136
		Operator Screws #8 x 7/8" Screw (Qty.4)	Standard Seacoast		508150 518150
		Operator Clip			31879
	2	Crank Handle & Crank Cover	Matte Black (After 10/7/16) Black (10/7/16 & Prior) Bronze Champagne Brass Satin Nickel White Oil Rubbed Bronze Faux Bronze		553015 552015 552014 552013 552018 552017 552012 552016 552019
 Not Shown on Assembly Dwg		Butterfly Handle	Bronze White Champagne Black		541050 541055 541071 541058
 Not Shown on Assembly Dwg		Turn Knob	Bronze Champagne White		540012 540010 548010
	3	Hinge Track	UR / LL (upper right/lower left) UL / LR (upper left/lower right) *Used for windows with 32" and smaller glass heights LH Hinge Track RH Hinge Track *Used for windows with greater than 32" glass heights		542040 542045 582153 582154
		Hinge Track Screws #7 x 3/4" Screw (Qty.6) for windows up to 32" glass ht (Qty.18) for windows greater than 32" glass ht			2380895
		Adjustable hinge wrench			540036
 Not Shown on Assembly Dwg		Spline			531301

Revive Series
Hybrid Casement (Awning)
Parts Identification

Image	Item #	Description	Color / Finish / Size	Spec	Part #
	4	Hinge Arm	Standard 10" Hinge Arm *Used for windows with 24" and smaller glass heights LH RH 22" Hinge Arm *Used for windows with 26" & 32" glass heights LH RH 26" Hinge Arm *Used for windows with greater than 32" glass heights LH RH Seacoast 10" Hinge Arm *Used for windows with 24" and smaller glass heights LH RH		 <

Revive Series
Hybrid Casement (Awning)
Parts Identification

Image	Item #	Description	Color / Finish / Size	Spec	Part #
	8	Tie Bar Assembly	Standard Up to 32" glass ht Tie Bars Tie Bar Guide Greater than 32" glass ht Seacoast Tie Bar Assembly Screws #6 x 1" Screw (Qty. 2 per Lock Point)	 LH RH LH RH LH RH 	 553180 553181 553182 553136 553137 553174 553175 550261 550265
	9	Keeper Keeper Screws #6 x 1 1/4" Screw (Qty. 2 per Keeper)	Standard Standard Seacoast Seacoast Standard Seacoast	LH RH LH RH 	553128 553127 553105 553106 550263 551263
	10	Concealed Snubber Concealed Snubber Screws #8 x 3/4" Screw (Qty. 2 per Snubber)	Standard Standard High Performance Seacoast Seacoast High Performance Standard Seacoast	 	540030 540050 570012 540051 508152 518152
	11	Frame Weatherstrip (All Four Sides)			531101
	12	Sash Weatherstrip (Head & Sides)			2380891
		Installation Screw #8 x 3" (Qty.4)			8016
		Frame Expander (Head, Sill, & Jambs) (Qty.1)	Sill Angle 0-7 Sill Angle 8+		480027 480019

Revive Series
Hybrid Casement (Awning)
Parts Identification

Image	Item #	Description	Color / Finish / Size	Spec	Part #
	13	Head Stop	26" Pine (Glass Size) 44" Pine 56" Pine 10' Pine Lineal 44" Alder 56" Alder 9' Alder Lineal 9' Fir Lineal Specialty Species Lineal		2700067 2700068 2700069 2700070 2700068-A 2700069-A 2700070-A 2700070-F 2700070-S
	14	Multi-Point Lock Side Stop	50" Pine 56" Pine 68" Pine 80" Pine 10' Pine Lineal 4'-7' Alder Lineal 4'-7' Fir Lineal Specialty Lineal Species *Contact inside sales for routed stops		2700074 2700075 2700077 2700078 2700072 2700072-A 2700072-F 2700072-S
	15	Sill Cover	26" Pine 44" Pine 56" Pine 10' Pine Lineal 44" Alder 56" Alder 8' Alder Lineal 6'-16' Fir Lineal Specialty Species Lineal *Contact inside sales for routed stops		2700055 2700057 2700058 2700052 2700057-A 2700058-A 2700052-A 2700052-F 2700052-S
 Not Shown on Assembly Dwg	16	Glass Stop Glass Stop Tape 1/16" x 5/16" Single Sided Glazing Tape 1/16" x 5/16" Double Faced	8' Pine Lineal 8' Alder Lineal 8' Fir Lineal Black - 3800' Spool Black - 216' Roll		2922300 2922300-A 2922300-F 390520 2381410